RAM TRUCK

Hood and Tailgate Accent Kit 6 for RAM 1500 Truck
Parts List
ATD-RAMGRPH012

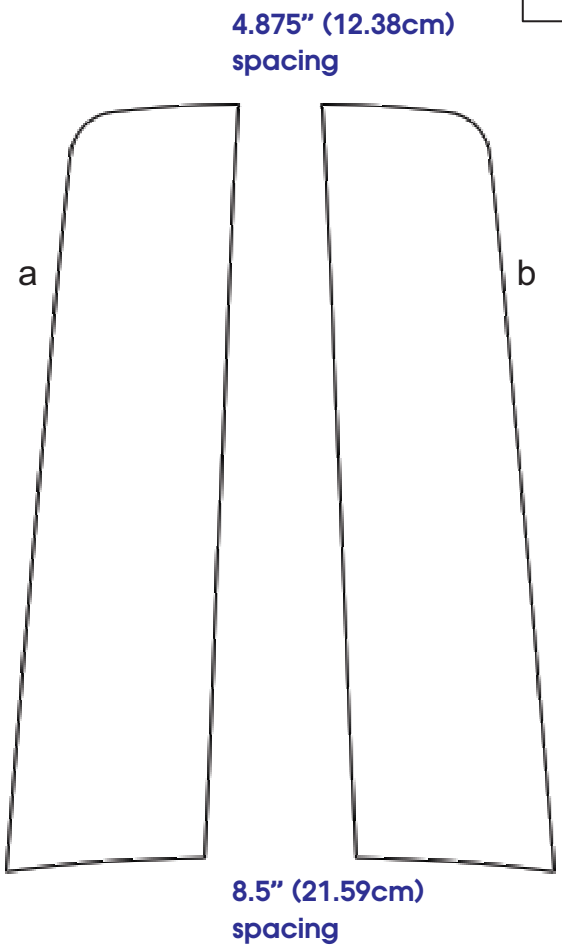

Part Number	Item	Cost
ATD-RAMGRPH012a	Hood Left	$123.95
ATD-RAMGRPH012b	Hood Right	$123.95
ATD-RAMGRPH012c	Tailgate Left	$59.95
ATD-RAMGRPH012d	Tailgate Right	$59.95

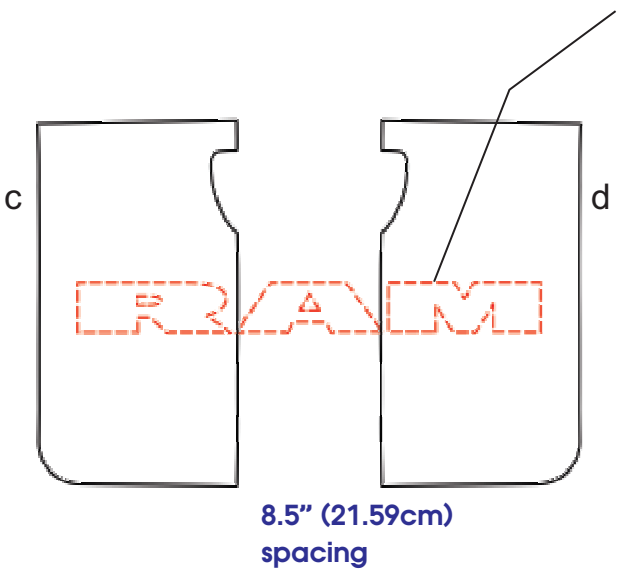

Note: Due to inconsistencies in placement of factory RAM lettering on the Tailgate, we have not provided for cutout(s) of such. We suggest removal & replacement of the emblem(s) or trimming as required.

Note: Spacing of Rally Stripes as shown shall be performed at time of installation. Kit does not come pre-spaced.

Auto Trim DESIGN®

autotrimdesign.com

All service marks and/or trademarks used herein are the property of the respective trademark holders; they are not used here for advertising or commercial purposes. Their use is done on a Fair Use assumption and without intent to compete with or take advantage of the trademark holder.
Auto Trim DESIGN® is in no way affiliated with, sponsored by or authorized by the associated trademark holder, unless otherwise specified. Any reference related to marks is made solely for identification purposes and is not intended to create any confusion or deception in the marketplace.

Copyright 2019, Auto Trim DESIGN®.
02102019