Clearly, the best protection you'll never see.

InvisiGARD™

PAINT PROTECTION SYSTEM

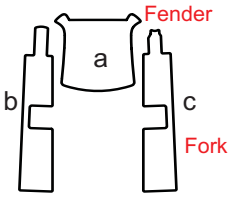

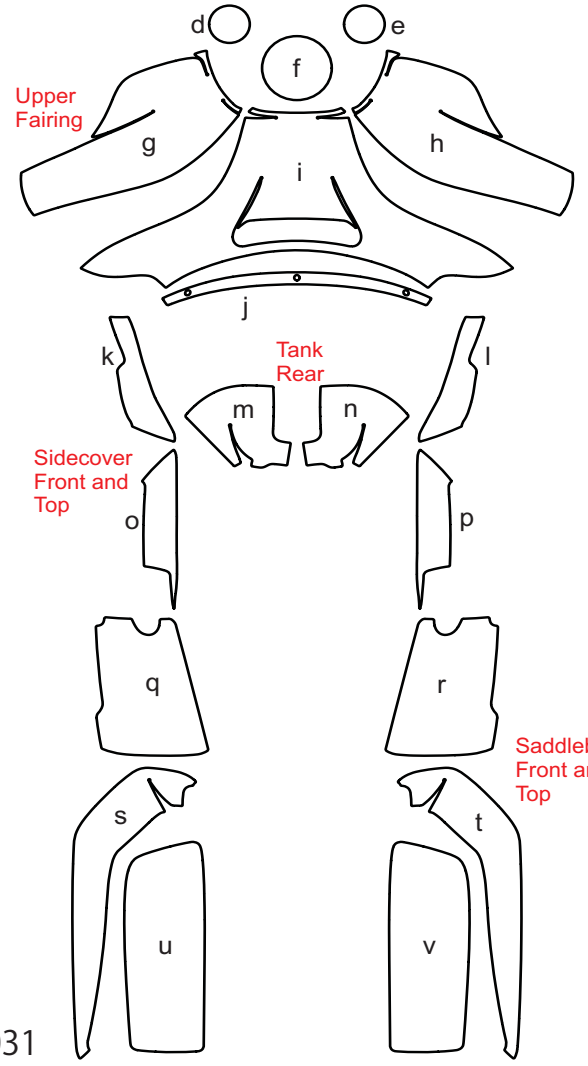

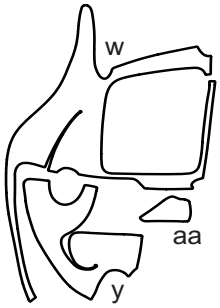

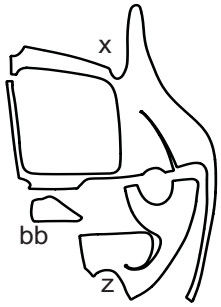

Estimated Install Time
3.0 Hour

IPP-TOUR-1031
Electra Glide Ultra Classic Paint & Headlight Protection Kit
Harley-Davidson

Auto Trim DESIGN®

autotrimdesign.com

Copyright 2014, Auto Trim DESIGN®. InvisiGARD® is a registered trademark of Auto Trim DESIGN® of Northeast Wisconsin, Inc.